SCHEDULE OF COLUMN:- M20			M20	STIRRUPS
COLUMN NOS.	SIZE (MMxMM)	FOUNDATION. TO 1ST FL.	1ST FLOOR TO ROOF.	
C1	250x450	8-16ØT	6-16ØT+2-12ØT	8mm @200mm C/C spaced @ 100 mm c/c near junctions.
C2	250x450	8-16ØT	8-16ØT	
C3	250x450	8-16ØT	6-16ØT+2-12ØT	
C4	250x450	8-20ØT	4-20ØT+4-16ØT	
C5	250x450	8-20ØT	4-20ØT+4-16ØT	
C6	250x450	8-16ØT	6-16ØT+2-12ØT	
C7	250x450	4-20ØT+4-16ØT	8-16ØT	
C8	250x450	8-16ØT	6-16ØT+2-12ØT	
C9	250x450	8-16ØT	6-16ØT+2-12ØT	
C10	250x450	8-20ØT	4-20ØT+4-16ØT	
C11	300x450	4-20ØT+4-16ØT	8-16ØT	
C12	250x450	6-16ØT+2-12ØT	4-16ØT+4-12ØT	
C13	250x450	4-20ØT+4-16ØT	8-16ØT	
C14	250x450	8-20ØT	4-20ØT+4-16ØT	
C15	250x450	4-20ØT+4-16ØT	8-16ØT	
C16	250x450	8-16ØT	8-16ØT	
C17	250x450	8-16ØT	8-16ØT	
C18	250x450	8-16ØT	8-16ØT	
C19	250x450	8-16ØT	8-16ØT	
C20	250x450	8-20ØT	4-20ØT+4-16ØT	
C21	250x450	8-16ØT	6-16ØT+2-12ØT	
C22	250x450	8-16ØT	6-16ØT+2-12ØT	
C23	250x450	8-16ØT	8-16ØT	

DETAIL OF S.C. UPTO TIE-BEAM
SCALE 1:25

SCHEDULE OF 1ST FLOOR TO ROOF (M20 AND FE 500)

BEAM MKD.	SIZE (MMxMM)	TOP ALTH	TOP EXT(AT SUPT.)	BOTT. ALTH	BOTT. EXT(MID SPAN)	STIRRUPS (2 LEGGED) AT SUPPORT	STIRRUPS (2 LEGGED) AT SPAN.
B1	250x450	2-16Ø	2-16Ø	2-16Ø	2-16Ø	8Ø2L@125C/C	8Ø2L@150C/C
B2	250x450	2-16Ø	2-20Ø	2-16Ø	2-20Ø	8Ø2L@125C/C	8Ø2L@150C/C
B3	250x450	3-16Ø	2-20Ø	2-16Ø 1-20Ø	2-16Ø	8Ø2L@125C/C	8Ø2L@150C/C
B3A	250x450	3-16Ø 2-20Ø	----	2-16Ø 1-20Ø	----	8Ø2L@125C/C	8Ø2L@150C/C
B4	250x450	2-16Ø	2-20Ø	2-20Ø	2-16Ø	8Ø2L@125C/C	8Ø2L@150C/C
B5	250x450	3-16Ø	2-20Ø	1-16Ø 2-20Ø	2-16Ø	8Ø2L@125C/C	8Ø2L@150C/C
B6	250x450	2-16Ø	2-16Ø	2-16Ø	2-16Ø	8Ø2L@125C/C	8Ø2L@150C/C
B7	250x450	2-16Ø 1-20Ø	2-20Ø	2-16Ø 1-20Ø	2-16Ø	8Ø2L@125C/C	8Ø2L@150C/C
H.L.B.	200x450	3-16Ø	----	3-16Ø	----	8Ø2L@125C/C	8Ø2L@150C/C

SCHEDULE OF TIE BEAM (M20 AND FE 500)

MKD.	SIZE (MMxMM)	TOP ALTH	TOP EXT(AT SUPT.)	BOTT. ALTH	BOTT. EXT(MID SPAN)	STIRRUPS (2 LEGGED) AT SUPPORT	STIRRUPS (2 LEGGED) AT SPAN.
TB1	250x350	2-12øT+1-16øT	---	2-12øT+1-16øT	---	8øT@125mm C/C	8øT@150mm C/C
TB2	250x350	2-16øT+1-12øT	---	2-16øT+1-12øT	---	8øT@125mm C/C	8øT@150mm C/C

SCHEDULE OF SLAB (S1)

SLAB THICKNESS AS MENTIONED :- 115 MM (ALONG SHORTER DIRECTION) (M20 AND FE 500)

SUPPORT	8mmø@ 150 mm c/c at top of support & extended upto L/3 from beam.
SPAN	8mmø@ 165 mm c/c at span & alternately curtained at L/4 from beam

SLAB THICKNESS AS MENTIONED :-115 MM (ALONG LONGER DIRECTION) (M20 AND FE 500)

SUPPORT	8mmø@ 165 mm c/c at top of support & extended upto L/3 from beam.
SPAN	8mmø@ 175 mm c/c at span & alternately curtained at L/4 from beam

SCHEDULE OF SLAB (S2)

SLAB THICKNESS AS MENTIONED :- 125 MM (ALONG SHORTER DIRECTION) (M20 AND FE 500)

SUPPORT	8mmø@ 125 mm c/c at top of support & extended upto L/3 from beam.
SPAN	8mmø@ 135 mm c/c at span & alternately curtained at L/4 from beam

SLAB THICKNESS AS MENTIONED :-125 MM (ALONG LONGER DIRECTION) (M20 AND FE 500)

SUPPORT	8mmø@ 135 mm c/c at top of support & extended upto L/3 from beam.
SPAN	8mmø@ 150 mm c/c at span & alternately curtained at L/4 from beam

SCHEDULE OF SLAB (S3)

SLAB THICKNESS AS MENTIONED :- 150 MM (ALONG SHORTER DIRECTION) (M20 AND FE 500)

SUPPORT	8mmø@ 135 mm c/c at top of support ALTH
SPAN	8mmø@ 150 mm c/c at span ALTH

SLAB THICKNESS AS MENTIONED :-150 MM (ALONG LONGER DIRECTION) (M20 AND FE 500)

SUPPORT	8mmø@ 150 mm c/c at top of support ALTH
SPAN	8mmø@ 165 mm c/c at span ALTH

SCHEDULE OF SLAB (S4)

SLAB THICKNESS AS MENTIONED :- 160 MM (ALONG SHORTER DIRECTION) (M20 AND FE 500)

SUPPORT	10mmø@ 125 mm c/c at top of support ALTH
SPAN	10mmø@ 135 mm c/c at span ALTH

SLAB THICKNESS AS MENTIONED :-150 MM (ALONG LONGER DIRECTION) (M20 AND FE 500)

SUPPORT	10mmø@ 135 mm c/c at top of support ALTH
SPAN	10mmø@ 150 mm c/c at span ALTH

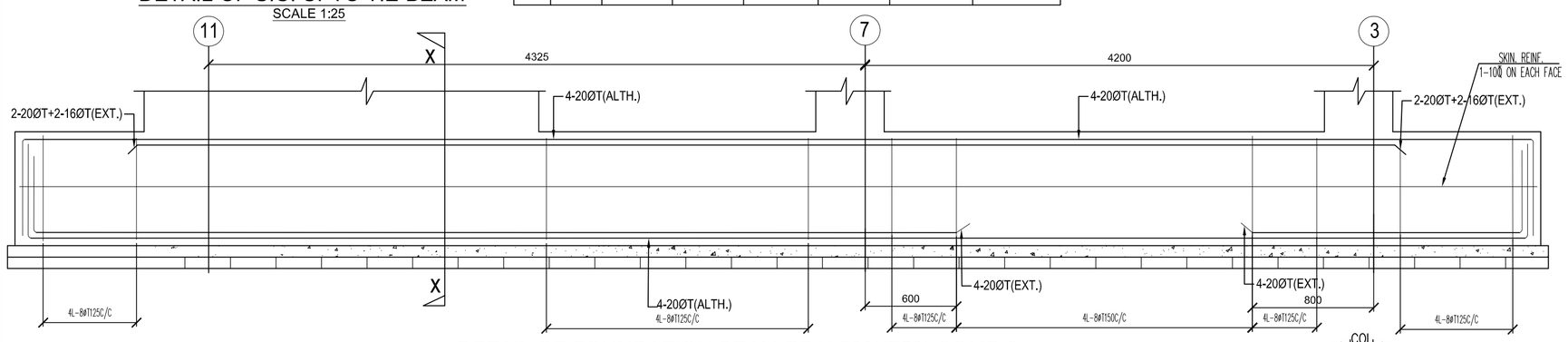

DETAIL OF FOUNDATION BEAM RB1(500X750) COMB 6
SCALE-125

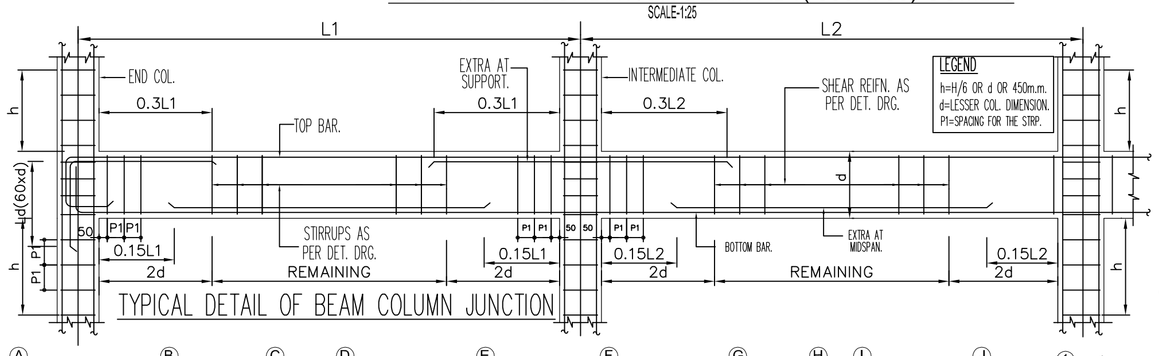

TYPICAL DETAIL OF BEAM COLUMN JUNCTION

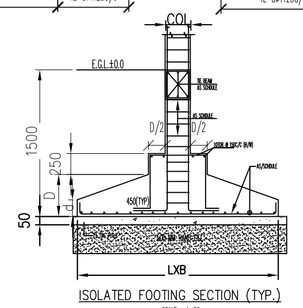

ISOLATED FOOTING SECTION (TYP.)
SCALE - 1:30

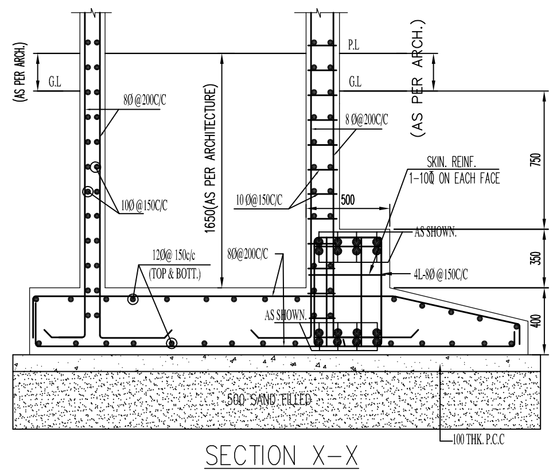

SECTION X-X
SCALE - 1 : 25

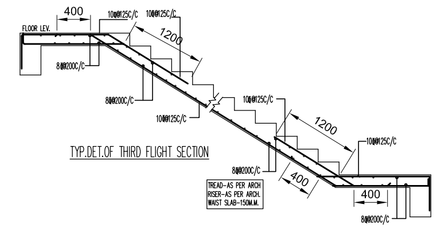

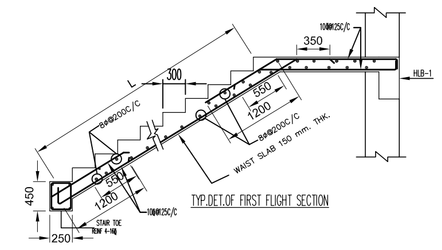

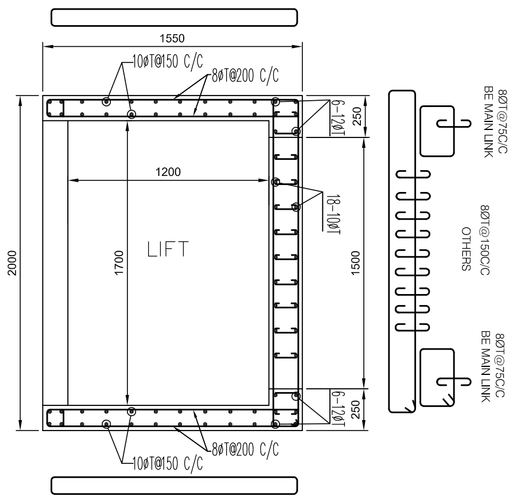

DETAIL OF LIFT ABOVE PINTH LEV.
SCALE - 1:25

1ST FLOOR BEAM LAYOUT PLAN
SCALE - 1:100

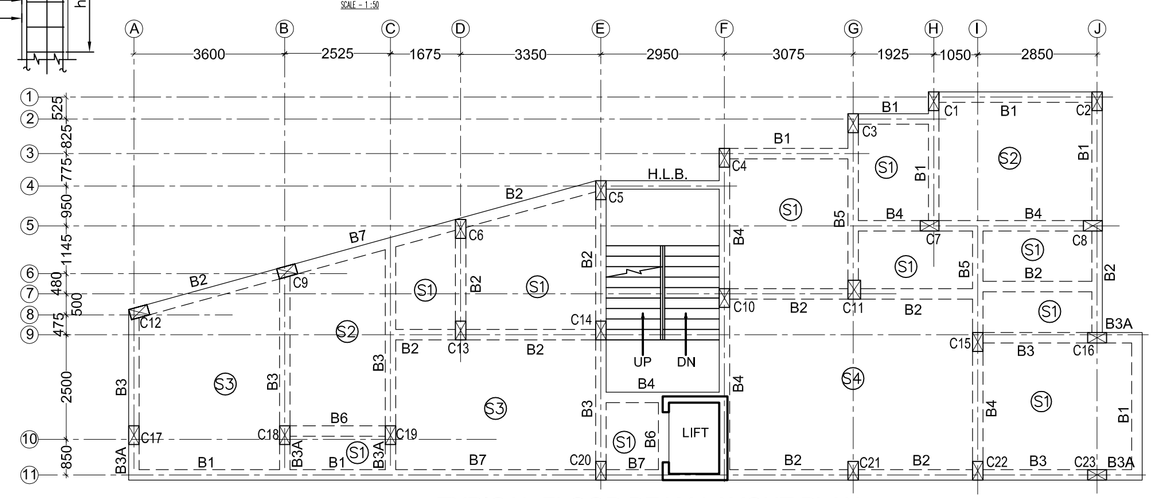

TYPICAL FLOOR BEAM LAYOUT PLAN
SCALE - 1:100

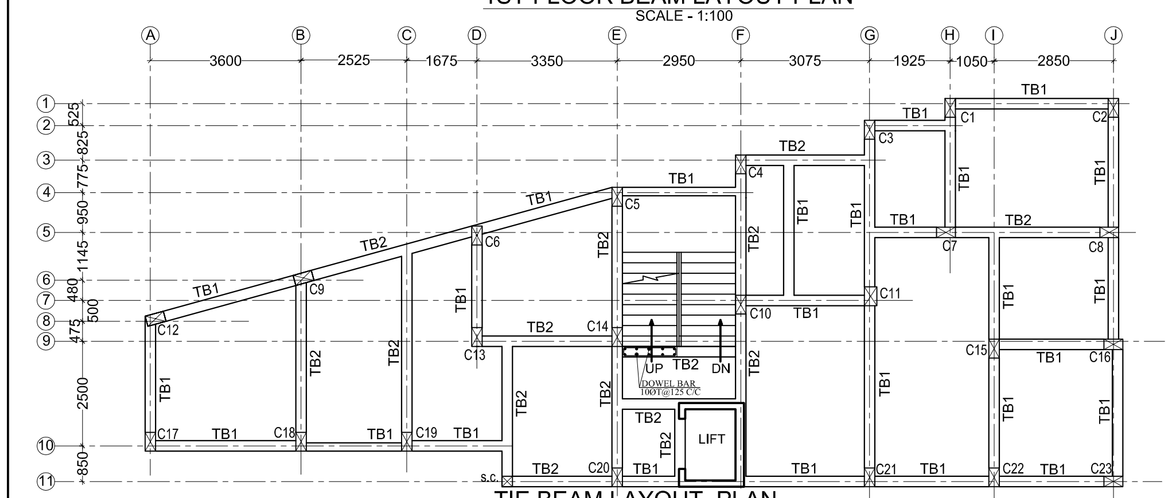

TIE BEAM LAYOUT PLAN
SCALE - 1:100

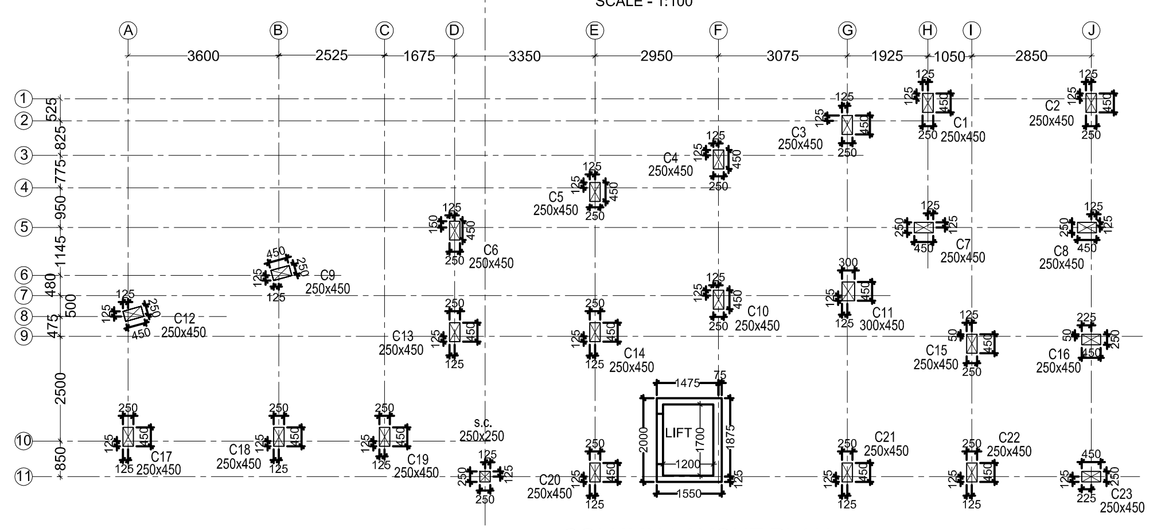

COLUMN LAYOUT PLAN
SCALE - 1:100

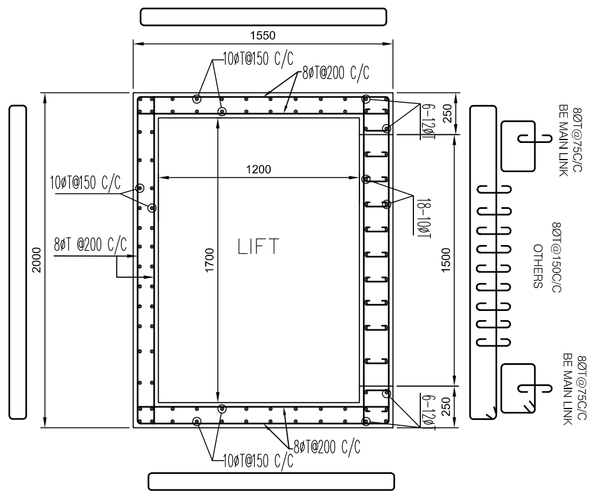

DETAIL OF LIFT BELOW PINTH LEV.
SCALE - 1:25

GRADE OF CONCRETE - AS SPECIFIED

GENERAL NOTES

1. ALL DIMENSIONS ARE IN MM.
2. CONCRETE SHOULD BE OF GRADE
   COLUMN = M20
   BEAM /SLAB=M20
   TIE BEAM M20
   GRADE OF STEEL ; FE 500
3. COVER TO REINFORCEMENT
   COLUMN = 40mm , BEAM = 25mm
   SLAB = 15mm , FOUNDATION = 50mm
4. DEPTH OF EXCAVATION OF UNDER GROUND SUMP SHOULD BE ABOVE THAT OF FOUNDATION.
5. DO NOT SCALE THE DRAWING . FOLLOW WITH DIMENSION.
6. ALL EXTERNAL WALLS ARE 250mm THK. & INTERNAL WALLS ARE 125 mm THK.
7. LEAN CONCRETE (1:3:6) NOMINAL MIX 75 THK. SHALL BE PROVIDED UNDER FOUNDATION.
8. THE DRAWINGS SHOULD BE STUDIED CAREFULLY AND ALL DIMENSIONS SHOWN HERESHOULD BE CHECKED AT SITE. CLARIFICATION REGARDING DISCREPANCY IF ANY,SHOULD BE OBTAINED BEFORE COMMENCEMENT OF WORK.
9. SPACER BAR USED SHALL BE OF 20mm. OR DIAMETER OF THE BAR USED N THE JOB WHICH IS LARGER.
10. STEEL TO BE USE SHOULD BE OF Fe-500 GRADE. REINFORCEMENT SHOULD BE WITHCOLD TWISTED DEFORMED BARS CONFIRMING TO IS : - 1786 AND HAVE BEEN SHOWN AS .
11. DEPTH OF EXCAVATION OF UNDER GROUND SUMP/RESERVOIR SHOULD BE ABOVE THE DEPTH OF FOUNDATION OF THE ADJACENT BUILDING / STRUCTURE.
12. LAP LENGTH OF STEEL BAR SHALL BE 50xDIA OF BAR

DECLARATION OF E.B.A.

I/WE DO HEREBY CERTIFY THAT PLANS , ELEVATIONS AND SECTIONS AND OTHER STRUCTURAL DETAILS OF THE PROPOSED BUILDINGS ON HOLDING NUMBER 1537, NORTH EAST PHARTABAD, WARD NO.- 28, N PREPARED IN CONFIRMING WITH ALL RELEVANT PROVISIONS UNDER THE WEST BENGAL MUNICIPAL (BUILDING) RULES 2007. THIS ALSO TO CERTIFY THAT RELEVANT NO OBJECTION CERTIFICATES FROM THE RESPECTIVE AUTHORITIES SUCH AS, FIRE AND EMERGENCY SERVICE DEPARTMENT, AIRPORT AUTHORITY, POLLUTION CONTROL BOARD, TELECOMMUNICATION DEPARTMENT ETC. AS APPLICABLE IN THIS REGARD, ARE ALSO ENCLOSED WITH THE APPLICATIONS FOR SEEKING APPROVAL OF THE PLAN TO CONSTRUCT/RECONSTRUCT/ADDITION TO ALTERATION OF THE BUILDING ON THE SAID HOLDING.

SARBANI MAZUMDER
COA, REG.NO. 92/15458
E.B.A. NO.- 035
UNDER RAJPUR SONARPUR MUNICIPALITY
E.B.A.

STRUCTURAL CERTIFICATE

I WE DO HEREBY CERTIFY THAT THE FOUNDATION AND SUPER STRUCTURE OF THE BUILDING PROPOSED FOR CONSTRUCTION AT HOLDING NO. 1537, NORTH EAST PHARTABAD, WARD NO.- 28, UNDER THE JURISDICTION OF RAJPUR SONARPUR HAVE BEEN PERSONALLY INSPECTED AND SO DESIGN BY ME/US WILL MAKE SUCH FOUNDATION AND SUPERSTRUCTURE SAFE IN ALL RESPECT INCLUDING THE CONSIDERATION OF BEARING CAPACITY AND SETTLEMENT OF SOIL AND OTHER CONDITIONS. IF ANY, CONFIRMING TO ALL STIPULATIONS OF ALL RELEVANT IS CODE OF PRACTICE AND NATIONAL BUILDING CODE.

DIPANKAR BHOWMIK
B.E. M.I.E. F.I.V.
ENLISTMENT NO-ESE 91/RJPSON/ESE/2014-15
RAJPUR SONARPUR MUNICIPALITY
STRUCTURAL ENGINEER

I WE DO HEREBY CERTIFY THAT THE FOUNDATION AND SUPER STRUCTURE OF THE BUILDING PROPOSED FOR CONSTRUCTION AT HOLDING NO. 1537, NORTH EAST PHARTABAD, WARD NO.- 28, UNDER THE JURISDICTION OF RAJPUR SONARPUR HAVE BEEN PERSONALLY INSPECTED AND SO DESIGN BY ME/US WILL MAKE SUCH FOUNDATION AND SUPERSTRUCTURE SAFE IN ALL RESPECT INCLUDING THE CONSIDERATION OF BEARING CAPACITY AND SETTLEMENT OF SOIL AND OTHER CONDITIONS. IF ANY, CONFIRMING TO ALL STIPULATIONS OF ALL RELEVANT IS CODE OF PRACTICE AND NATIONAL BUILDING CODE.

SHUBHANKAR ROY
24/RJPSON/GEO-TECH II
GEOTECHNICAL ENGINEER

LIVING SPACE (PROP. ANIKET SINGH)
NAME OF OWNER

PROJECT
STRUCTURAL DRAWING FOR PROPOSED G+ III STORIED RESIDENTIAL CUM COMMERCIAL BUILDING PLAN AT HOLDING NO. - 1537, NORTH EAST PHARTABAD, WARD NO.- 28, MOUZA - BARHANS PHARTABAD, J. L. NO.- 47, R. S. & L. R. DAG NO.- 3290, R. S. KHATIAN NO.- 1501, L. R. KHATIAN NO.- 4380, P.S -NARENDRAPUR (OLD SONARPUR), DIST.- 24 PGS. (S), UNDER RAJPUR SONARPUR MUNICIPALITY.

N	DRAWN - SUNIPA	SCALE - 1:100
	DESIGNED	DATE - 9.06.2025
	CHECKED -	JOB NO
	APPROVED	SHEET NO - 1 OF 2

Sanyalson Associates Consultant Pvt. Ltd.
CONSULTANT PLANNER & STRUCTURAL ENGINEERS
P-157 KANUNGO PARK KOLKATA-84

OFFICE USE ONLY